Mars Valve – Leading the Industry
Partnering with you

SERIES 90



SIL 3 Certified

High Performance
Split Body Flanged Ball Valve

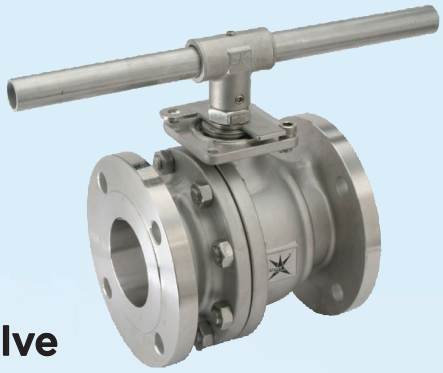



API 607
7th Edition
ISO 10497
3rd Edition

CE 2014/68/EU

Ex 2014/34/EU

TA-Luft & ISO 15848-1

EC1935/2004

FDA

REACH COMPLIANCE

RoHS COMPLIANT

Split Body Flanged Ball Valves, Full Port Design

Size Range: (1/2" – 4"/ DN15 – DN100) Investment Cast

Pressure Rating:
FIG. 90-10 ANSI 150#
FIG. 90-30 PN 10/16 DIN F1
FIG. 90-40 PN 10/16 DIN F4
FIG. 90-50 PN 25/40 DIN F1
FIG. 90-60 PN 25/40 DIN F4
FIG. 90-90 JIS 5K

Body, end caps: CF8M / 1.4408, WCB / 1.0619,
Alloy 20, Duplex, Hastelloy C

Seats: RTFE or PTFE, various options are available:
PEEK, TFM1600, CTFE (25%Carbon / 75%PTFE),
Delrin, UHMWPE, 50/50 S/S filled PTFE & **Metal Seats**

Compliance Standard:
ASME B16.34 Fully conforms
ASME B16.5, B16.10, DIN 3202 F1/F4, API 607,
ISO 5211, ISO 5209, EN 1092-1, MSS SP-55, EN 10204-3.1

Quality Assurance: ISO 9001

Inspection and Test: API 598

Interchangeable parts with Series 90D valves
End caps, Ball and Ball seats are interchangeable with Series 90D ball valves, reduced your parts inventory

Mars Unique SealMax® Triple-Sealing Stem Packing System – Live Loaded – Maintenance Free – Extra Long Cycle Life – TA-Luft Approved

1. **Pyramidal Stem with Stem Seal**
   First stage of defense against leakage.
   The 45° slope of the stem accompany the stem seal effectively blocks all leak path during rotation.
2. **O-Ring Stem Packing**
   Second stage of defense against leakage. Enhances stem seal and maintains stem alignment, provides extra longer service life.
3. **V-Ring Stem Packing**
   Third stage of defense against leakage. Multiple layers of V-Ring Chevron Packing expands side way as it is being compressed, blocking all air pockets to prevent leak path.
4. **Lock Saddle**
   Stabilizes the entire stem nut to keep it from loosening during operation.

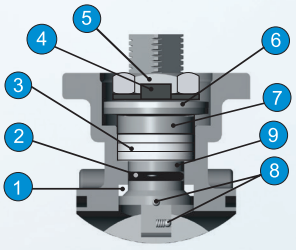

5. **Stem Nut**
   Compress the entire stem system to enable blocking of leakage.
6. **Belleville Washers**
   Automatically compress the seals to adjust for wear, pressure, and temperature fluctuations.
7. **Gland**
   Made of stainless steel, equally distributes the compressive force on the packing and seal.
8. **Anti-Static Device**
   Spring loaded Stem-to-Ball and Stem-to-Body as standard.
9. **Super Smooth Stem Finish**
   Reduces seal friction and operating torque, prolongs service life.

Dimensions (mm)

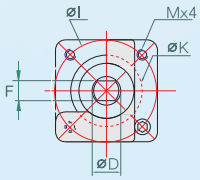

1/2"~ 2"

for double Joint Gasket Design



A-VIEW

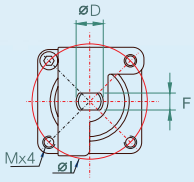

21/2"~4"

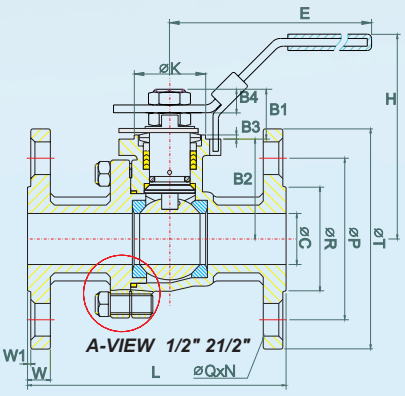

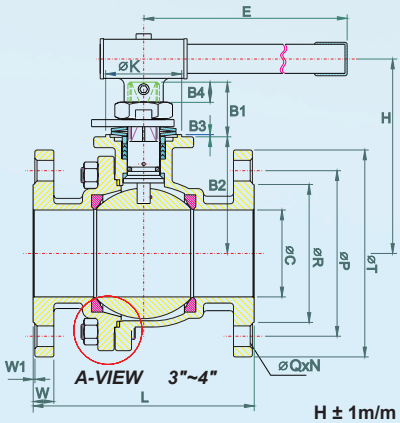

90-10 (ANSI CLASS 150) — H ± 1m/m

SIZE	B1+0.5	B2	B3	B4 +1:5 -0.5	ØC	ØD	E	F	H	ØI	ØK	L	M	N	ØP	ØQ	ØR	ØT	W	W1	Wt(kg)	ISO5211
1/2"	23	34.5	1	9.2	15.0	11.1	170	8.0	80	42	30	108.3	M5(10-24UNC)	4	60.5	16	35.1	88.9	11.2	1.6	1.69	F04
3/4"	23	42	1	10.2	20.0	11.1	170	8.0	87	42	30	117.3	M5(10-24UNC)	4	69.9	16	42.9	98.6	11.2	1.6	2.10	F04
1"	23.5	49.8	2	8.1	25.0	14.3	207	9.7	103	50	35	127.1	M6(1/4"-20UNC)	4	79.2	16	50.8	108	11.2	1.6	3.02	F05
11/4"	23.5	55	2	8.1	32.0	14.3	207	9.7	108	50	35	139.7	M6(1/4"-20UNC)	4	88.9	16	63.5	117.3	12.7	1.6	5.56	F05
11/2"	34.8	78.3	2	14.8	38.0	19.0	261	12.0	153	70	55	165.1	M8(5/16"-18UNC)	4	98.6	16	73.2	127	14.3	1.6	6.17	F07
2"	34.8	86.4	2	14.8	50.0	19.0	261	12.0	162	70	55	178.3	M8(5/16"-18UNC)	4	120.7	19	91.9	152.4	15.9	1.6	8.70	F07
21/2"	34.8	97.4	2	14.8	65.0	19.0	261	12.0	173	70	55	190	M8(5/16"-18UNC)	4	139.7	19	104.6	177.8	17.6	1.6	13.62	F07
3"	46	107.4	2	23.5	80.0	24.0	365	15.0	174.8	102	70.0	203.5	M10(3/8"-16UNC)	4	152.4	19	127	190.5	19	1.6	18.58	F10
4"	46	122.4	2	23.5	100	24.0	365	15.0	189.9	102	70.0	228.6	M10(3/8"-16UNC)	8	190.5	19	157.2	228.6	23.9	1.6	29.6	F10

90-30 F1 (PN10/16) / 90-40 F4 (PN10/16) — * Dimension for (90-30) F1

SIZE	B1+0.5	B2	B3	B4 +1:5 -0.5	ØC	ØD	E	F	H	ØI	ØK	L		M	N	ØP	ØQ	ØR	ØT	W	W1	Wt(kg)	ISO5211
												F4	*F1										
1/2"	23	34.5	1	9.2	15.0	11.1	170	8.0	80	42	30	115	130	M5	4	65	14	45	95	16	2	2.23	F04
3/4"	23	42.5	1	10.2	20.0	11.1	170	8.0	87	42	30	120	150	M5	4	75	14	58	105	18	2	3.10	F04
1"	23.5	50	2	8.1	25.0	14.3	207	9.7	103	50	35	125	160	M6	4	85	14	68	115	18	2	4.11	F05
11/4"	23.5	54.7	2	8.1	32.0	14.3	207	9.7	108	50	35	130	180	M6	4	100	18	78	140	18	2	5.56	F05
11/2"	34.8	78	2	14.8	38.0	19.0	261	12.0	153	70	55	140	200	M8	4	110	18	88	150	18	3	7.64	F07
2"	34.8	86.7	2	14.8	50.0	19.0	261	12.0	162	70	55	150	230	M8	4	125	18	102	165	20	3	9.45	F07
21/2"	34.8	98	2	14.8	65.0	19.0	261	12.0	173	70	55	170	290	M8	4	145	18	122	185	18	3	13.93	F07
3"	46	108.0	2	23.5	80.0	24.0	365	15.0	175.4	102	70.0	180	310	M10	8	160	18	138	200	20	3	18.6	F10
4"	46	123.0	2	23.5	100	24.0	365	15.0	190.5	102	70.0	190	350	M10	8	180	18	158	220	20	3	25.86	F10

90-50 F1 (PN25/40) / 90-60 F4 (PN25/40) — * Dimension for (90-50) F1

SIZE	B1+0.5	B2	B3	B4 +1:5 -0.5	ØC	ØD	E	F	H	ØI	ØK	L		M	N	ØP	ØQ	ØR	ØT	W	W1	Wt(kg)	ISO5211
												F4	*F1										
1/2"	23	34.5	1	9.2	15.0	11.1	170	8.0	80	42	30	115	130	M5	4	65	14	45	95	16	2	2.23	F04
3/4"	23	42.5	1	10.2	20.0	11.1	170	8.0	87	42	30	120	150	M5	4	75	14	58	105	18	2	3.10	F04
1"	23.5	50	2	8.1	25.0	14.3	207	9.7	103	50	35	125	160	M6	4	85	14	68	115	18	2	4.11	F05
11/4"	23.5	54.7	2	8.1	32.0	14.3	207	9.7	108	50	35	130	180	M6	4	100	18	78	140	18	2	5.56	F05
11/2"	34.8	78.0	2	14.8	38.0	19.0	261	12.0	153	70	55	140	200	M8	4	110	18	88	150	18	3	7.64	F07
2"	34.8	86.7	2	14.8	50.0	19.0	261	12.0	162	70	55	150	230	M8	4	125	18	102	165	20	3	10.15	F07
21/2"	34.8	98.0	2	14.8	65.0	19.0	261	12.0	173	70	55	170	290	M8	8	145	18	122	185	22	3	15.00	F07
3"	46	108.0	2	23.5	80.0	24.0	365	15.0	175.4	102	70.0	180	310	M10	8	160	18	138	200	24	3	20.3	F10
4"	46	123.0	2	23.5	100	24.0	365	15.0	190.5	102	70.0	190	350	M10	8	190	22	162.6	235	24	3	29.92	F10

90-90 (JIS 5K)

SIZE	B1+0.5	B2	B3	B4 +1:5 -0.5	ØC	ØD	E	F	H	ØI	ØK	L	M	N	ØP	ØQ	ØR	ØT	W	W1	Wt(kg)	ISO5211
1/2"	23	34.5	1	9.2	15.0	11.1	170	8.0	80	42	30	108.3	M5(10-24UNC)	4	60	12	35.1	88.9	11.2	1.6	1.69	F04
3/4"	23	42	1	10.2	20.0	11.1	170	8.0	87	42	30	117.3	M5(10-24UNC)	4	65	12	42.9	98.6	11.2	1.6	2.10	F04
1"	23.5	49.8	2	8.1	25.0	14.3	207	9.7	103	50	35	127.1	M6(1/4"-20UNC)	4	75	12	50.8	108	11.2	1.6	3.02	F05
11/4"	23.5	55	2	8.1	32.0	14.3	207	9.7	108	50	35	139.7	M6(1/4"-20UNC)	4	90	15	63.5	117.3	12.7	1.6	5.56	F05
11/2"	34.8	78.3	2	14.8	38.0	19.0	261	12.0	153	70	55	165.1	M8(5/16"-18UNC)	4	95	15	73.2	127	14.3	1.6	6.17	F07
2"	34.8	86.4	2	14.8	50.0	19.0	261	12.0	162	70	55	178.3	M8(5/16"-18UNC)	4	105	15	88	152.4	15.9	1.6	8.70	F07
21/2"	34.8	97.4	2	14.8	65.0	19.0	261	12.0	173	70	55	190	M8(5/16"-18UNC)	4	130	15	104.6	177.8	17.6	1.6	13.62	F07
3"	46	107.4	2	23.5	80.0	24.0	365	15.0	174.8	102	70.0	203.5	M10(3/8"-16UNC)	4	145	19	125	190.5	19	1.6	18.58	F10

Pressure Vs. Temperature Chart

Class 150: Series 90-10(1/2"~4")

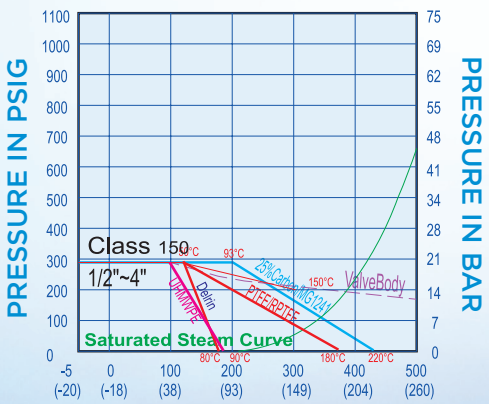

PN16:SERIES 90-30/40(1/2"~4")
PN40: SERIES 90-50/60(1/2"~4")

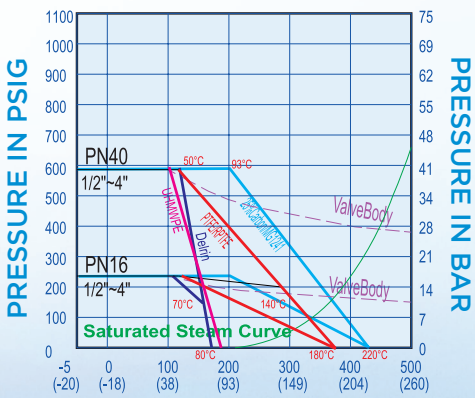

Breakaway Torque (RTFE) & Cv Value

SIZE.	DN	Inch-Lb	Nm	Cv	Kv-M3/h
1/2"	15	89	10	15	13
3/4"	20	124	14	40	34
1"	25	151	17	70	60
1.1/4"	32	204	23	110	94
1.1/2"	40	257	29	250	213
2"	50	319	36	430	366
2.1/2"	65	523	59	700	595
3"	80	691	79	1100	935
4"	100	833	94	2000	1700

Break Away Torque
30% safety factor included.
Standard Mars valves are assembled with silicon-free based in lubricant.
Torque for dry assembled valves, please consult factory.

Design Features

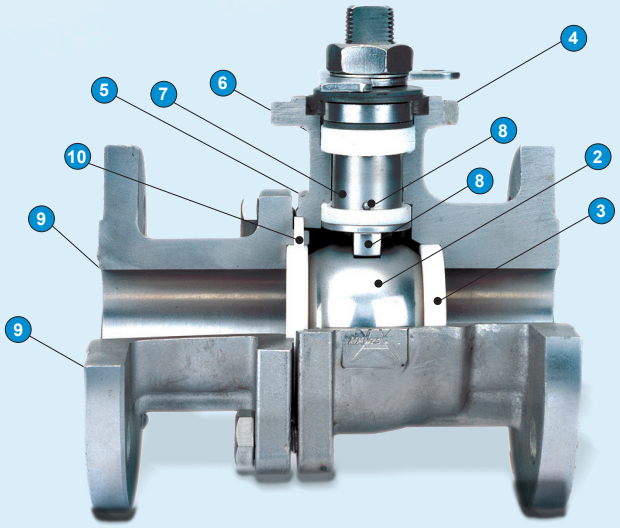

1. Fire-Safe Certified to API 607 7th Edition

2. Ball
Floating ball design provides pressure-assisted sealing plus temperature and wear compensation.
Precisely machined, mirror polished solid ball for bubble tight shutoff with less operating torque.
A relief hole in stem slot to balance the pressure in the body cavity ensures tight shutoff and long service life.
V-PORT control valves available on request.

3. Seats
Features with relief slots to relieve pressure in upstream, reducing seat wear and valve torque.
Wide range of materials available to suit various applications.

4. Fully machined ISO 5211 mounting pad
Tapped and drilled, ease of automation.

5. Mars SealMax® Stem Design
Provides optimum stem seal and extremely high cycle life.

6. Super smooth stem surface
Reduces seal friction and operating torque, prolongs service life.

7. Blow-out proof stem
Prevents stem from blowing out, for maximum safety.

8. Anti-Static Device
Standard applied stem-to-ball and stem to-body.

9. All wetted parts and flange surface fully machined

10. Fully encapsulated body seals
Maintenance sealing integrity from high vacuum to high pressure and temperature applications.

11. Interchangeable Parts with Series 90D ball valves
End caps, Ball, and Ball Seats are interchangeable with Mars Series 90D ball valves, reduce manufacturing costs and your parts inventory.

Material List

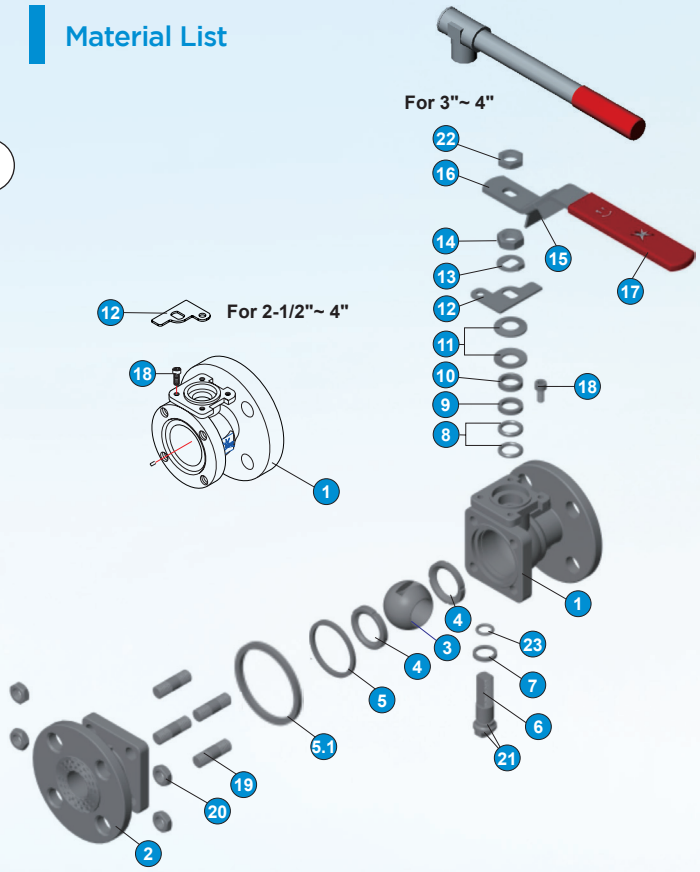

NO.	PART NAME	MATERIAL	Q'TY
1	Body	CF8M / WCB	1
2	Cap	CF8M / WCB	1
3	Ball	CF8M	1
4	Seat	RPTFE	2
5	Joint Gasket	PTFE	1
6	Stem	SUS 316	1
7	Stem Seal	RPTFE	1
8	Stem Packing	PTFE	§
9	Stem Packing	25% GLASS FIBER FILLED+ PTFE	1
10	Gland	SUS 304	1
11	Belleville Washer	SUS 301	2
12	Locking Plate	SUS 304	1
13	Lock Saddle	SUS 304	1
14	Stem Nut	SUS 304	1
15	Locking Device	SUS 304	1
16	Handle	SUS 304	1
17	Handle Sleeve	VINYL	1
18	Stop Pin	SUS 304	1
19	Bolt	SUS 304	**
20	Bolt (Stud & Nut)	SUS 304	**
21	Anti-static Device	SUS 316	2
22	Handle Nut	SUS 304	1
23	O-RING	VITON	1

§ For 1/2"~11/4"- 2pcs, For 11/2"~21/2"- 3pcs.
** For 1/2"~2"-4pcs of bolt; For 21/2"~4" -8 pcs of stud and nut
NO.* 5.1 for 90X double Joint Gasket Design

Series 90 High Performance V-Port Control Ball Valves

Mars V-Port ball valves are used for control the flow. It delivers a precise flow control while retaining the durability and tight shutoff characteristics of a ball valve, excellent for regulating service. It is a compact and economical solution compared to traditional systems.

Available in 30°, 60°, and 90° V-notch configurations. Mars V-Port ball valves feature an integrated V-notch machined directly into the ball, not a seat insert, this design not only improves flow characteristics but also eliminates the need for frequent seat replacement.



Series 90 Available with Engineered Metal Seats

The Mars metal seat ball valve is built for tough applications involving high temperature, high pressure, and abrasive fluids. It's ideal for use in Oil & Gas, Petroleum, Petrochemical, Chemical, Pulp & Paper, and Mining industries.

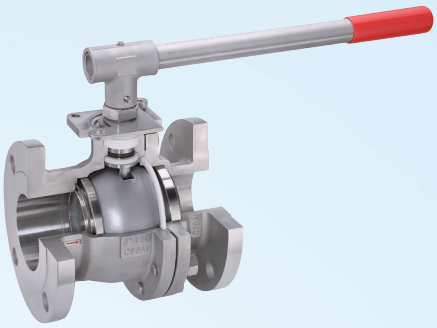

Series 90 With MARS TSM Unit



The TSM unit designed for possible Fugitive emission, provides a secondary stem seal to prolong service life.

The TSM unit can also function as stem extension for insulation.

Spring Return Sliding Lock Handle (SRSL)

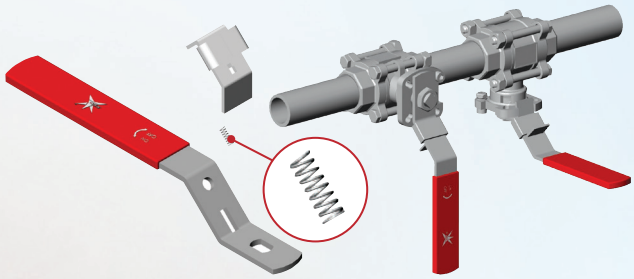

Regardless of the orientation of the ball valves, the SRSL handle always secures handle in position, making valve operation safe.

HOW TO ORDER ■ 90-10 ST05B

90-10	S	T	05	B
VALVE	BODY MATERIAL	SEAT MATERIAL	SIZE	HANDLE STYLE
■ 90-10 #150	■ S - CF8M	□ P - PTFE	□ 03) 1/2"	□ Std. handle
□ 90-30 PN16 F1	□ W - WCB	□ R - RTFE	□ 04) 3/4"	□ I - Investment Cast
□ 90-40 PN16 F4	□ L - CF3M	■ T - TFM1600	■ 05) 1"	□ O - Oval handle
□ 90-50 PN40 F1	□ A5 - Duplex	□ S - 50/50 S.S.+PTFE	□ 06) 1 1/4"	□ L - SRSL handle
□ 90-60 PN40 F4	□ T - Titanium	□ M - MG1241	□ 07) 1 1/2"	□ S - SRS handle
□ 90-90 JIS5K	□ A - Alloy 20	□ C - Carbon filled PTFE	□ 08) 2"	■ B - Bare shaft
		□ U - UHMWPE	□ 09) 2 1/2"	□ G - Gear box
		□ K - Peek	□ 10) 3"	
		□ D - Delrin	□ 11) 4"	
		□ A - Metal		

MARS VALVE CO., LTD.
No.83, Sec.1, Chung De 8th Road,
Taichung, 406, Taiwan R.O.C
TEL: +886-4-2246-3808
FAX: +886-4-2247-0912
E-mail: mars@marsvalve.com.tw
sales@marsvalve.com.tw
www.marsvalve.com.tw

Distributed by: