Mars Valve – Leading the Industry
Partnering with you

SERIES 91D



SIL 3 Certified

High Performance
Uni-body Flanged Ball Valve
Direct Mount of Actuators





API 607
7th Edition
ISO 10497
3rd Edition

CE 2014/68/EU

Ex 2014/34/EU

TA-Luft & ISO 15848-1

EC1935/2004

FDA

REACH COMPLIANCE

RoHS COMPLIANT

Mars Direct Mount Ball Valves, Easy to Automate ! Reduced Port Design

Size Range: (1/2" – 6" / DN 15 – DN 150)

Pressure Rating:
FIG. 91D-10 ANSI 150#
FIG. 91D-20 ANSI 300#

Body, end caps: CF8M/1.4408, WCB/1.0619,
Alloy 20, Duplex, Hastelloy C

Seats: RTFE or PTFE, various options are available:
TFM1600, CTFE (25%Carbon / 75%PTFE),
UHMWPE, 50/50 S/S filled PTFE & **Metal Seats**

Compliance Standard:
ASME B16.34 Fully conforms
ASME B16.5, B16.10, API 607, ISO 5211, ISO 5209,
MSS SP-55, EN 10204-3.1

Quality Assurance: ISO 9001

Inspection and Test: API 598

Mars Unique SealMax® Triple-Sealing Stem Packing System – Live Loaded – Maintenance Free – Extra Long Cycle Life – TA-Luft Approved

1. **Pyramidal Stem with Stem Seal**
   First stage of defense against leakage.
   The 45° slope of the stem accompany the stem seal effectively blocks all leak path during rotation.
2. **O-Ring Stem Packing**
   Second stage of defense against leakage. Enhances stem seal and maintains stem alignment, provides extra longer service life.
3. **V-Ring Stem Packing**
   Third stage of defense against leakage. Multiple layers of V-Ring Chevron Packing expands side way as it is being compressed, blocking all air pockets to prevent leak path.
4. **Lock Saddle**
   Stabilizes the entire stem nut to keep it from loosening during operation.

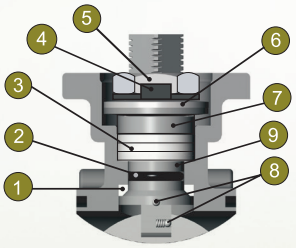

5. **Stem Nut**
   Compress the entire stem system to enable blocking of leakage.
6. **Belleville Washers**
   Automatically compress the seals to adjust for wear, pressure, and temperature fluctuations.
7. **Gland**
   Made of stainless steel, equally distributes the compressive force on the packing and seal.
8. **Anti-Static Device**
   Stem-to-Ball and Stem-to-Body as standard.
9. **Super Smooth Stem Finish**
   Reduces seal friction and operating torque, prolongs service life.

Design Features

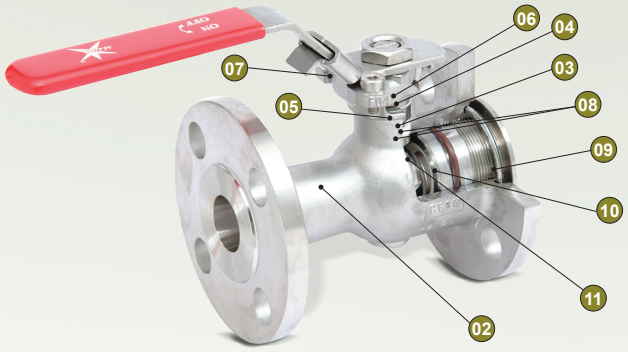

1. Mars Patented Direct Mount Design Making Automation Easy
No Bracket and adapter are required for actuator mounting, provides easy and low cost automation with improved cycle life.

2. Single Piece Body
Compact design with lower weight, high strength, eliminating the possible body - end leak path on split body design.

3. Mars TA-Luft Approved SealMax® Stem Packing System
Provides optimum stem seal and extremely high cycle life.

4. Blow-out-proof Stem
The internally assembled stem provides blowout-proof safety.

5. O-Ring Stem Seal
Enhances stem wear and maintains stem alignment.

6. Super smooth stem surface
Reduces seal friction and operating torque.

7. Locking device standard

8. Anti-Static Device
Standard applied to ball-to-stem and stem-to-body.

9. Fully Encapsulated Body Seals
Maintains sealing integrity from high vacuum to high pressure and temperature applications.

10. Seats
- Features with relief slots to relieve pressure in upstream, reducing seat wear and valve torque.
- Wide range of materials available to suit various applications.

11. Ball
- Precisely machined, mirror finished ball surface for bubble tight shutoff with less operating torque.
- A relief hole in stem slot to balance the pressure in the body cavity ensures tight shutoff and long service life.

Dimensions (mm)

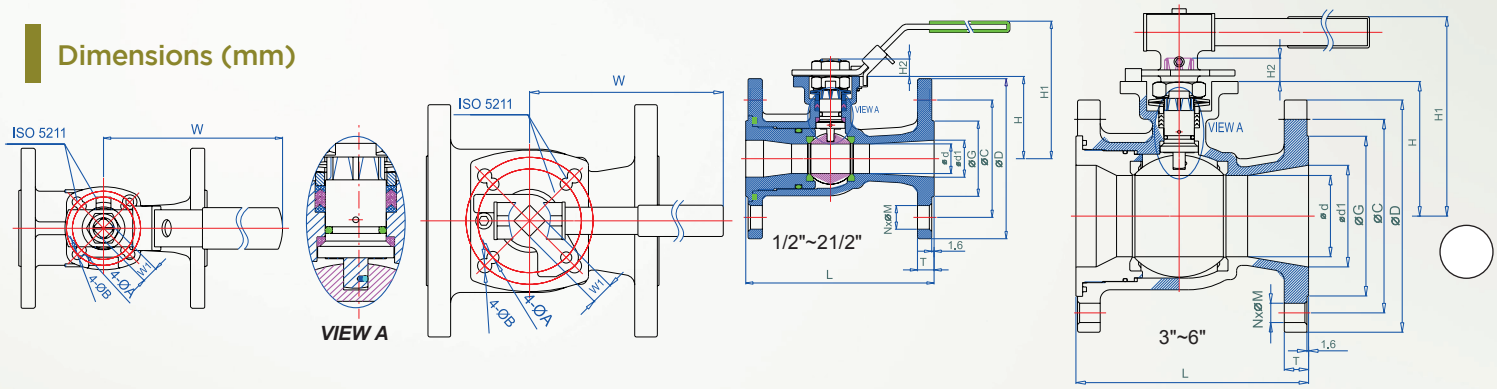

DIMENSIONS (mm) **1 PC REDUCED 150 LB BALL VALVE**

SIZE	Ød	Ød1	ØD	ØC	ØG	T	N-ØM	L	H	H1	H2	W	W1	ISO5211	E	ØA	ØB	Wt(kg)
1/2"	12.7	15.0	88.9	60.5	35.1	11.2	4-16	108.3	46.7	82.7	9.4	165	11	F04-F05	42-50	6.5	7.0	1.65
3/4"	15.0	20.0	98.6	69.9	42.9	11.2	4-16	117.3	51.2	87.2	9.9	165	11	F04-F05	42-50	6.5	7.0	2.1
1"	20.0	25.0	108.0	79.2	50.8	11.2	4-16	127.1	55.5	91.5	9.9	165	11	F04-F05	42-50	6.5	7.0	2.6
11/2"	32.0	38.0	127.0	98.6	73.2	14.3	4-16	165.1	72.6	119.6	12.9	215	14	F05-F07	50-70	7.5	9.0	5.4
2"	38.0	50.0	152.4	120.7	91.9	15.9	4-19	178.3	89.1	144.1	18.1	262	17/19	F07-F10	70-102	10.0	12.0	8.2
21/2"	50.0	65.0	177.8	139.7	104.6	17.6	4-19	190.0	96.6	151.6	19.0	262	17/19	F07-F10	70-102	10.0	12.0	12.0
3"	65.0	80.0	190.5	152.4	127.0	19.0	4-19	203.5	116.0	176	19.0	365	17/19	F07-F10	70-102	10.0	12.0	16.2
4"	80.0	100	228.6	190.5	157.2	23.9	8-19	228.6	132.5	196	23	365	22	F10-F12	102-125	12.0	14.0	26.3
6"	111	153	279.4	241.3	215.9	25.4	8-22.2	266.7	179.7	263	28.5	705	27	F12-F14	125-140	14.0	18.0	45.1

Dimension W1: 17/19 Standard 17, Option 19

DIMENSIONS (mm) **1 PC REDUCED 300 LB BALL VALVE**

SIZE	d	d1	D	C	G	T	N-M	L	H	H1	H2	W	W1	ISO5211	E	ØA	ØB
1/2"	12.7	15.0	95.3	66.5	35.1	14.3	4-16	139.7	48.7	85	9.4	165	11	F04-F05	42-50	6.5	7.0
3/4"	15.0	20.0	117.3	82.6	42.9	15.8	4-19	152.4	63.5	100	10.3	165	11	F04-F05	42-50	6.5	7.0
1"	20.0	25.0	124.0	88.9	50.8	17.6	4-19	165.1	63.5	100	10.3	165	11	F04-F05	42-50	6.5	7.0
11/2"	32.0	38.0	155.4	114.3	73.2	20.6	4-22.2	190.5	79.7	127	12.9	215	14	F05-F07	50-70	7.5	9.0
2"	38.0	50.0	165.1	127	91.9	22.4	8-19	216	89.1	144	18.1	262	17/19	F07-F10	70-102	10.0	12.0
3"	65.0	80.0	209.6	168.2	127.0	28.5	8-22.2	282.4	116.0	176	19	365	17/19	F07-F10	70-102	10.0	12.0
4"	80.0	100	254	200.2	157.2	31.8	8-22.2	304.8	132.5	196	23	365	22	F10-F12	102-125	12.0	14.0

Dimension W1: 17/19 Standard 17, Option 19

Breakaway Torque (RTFE) & Cv Value

SIZE.	DN	Inch-Lb	Nm	Cv U.S GPM	Kv-M3/h
1/2"	15	89	10	9	8
3/4"	20	89	10	15	13
1"	25	124	14	42	36
1.1/2"	40	204	23	125	106
2"	50	301	34	165	140
2.1/2"	65	346	39	245	208
3"	80	523	59	350	298
4"	100	851	96	680	578
6"	150	1878	212	1020	867

Break Away Torque
30% safety factor included.
Standard Mars valves are assembled with silicon-free based in lubricant, Torque for dry assembled valves, please consult factory.

Pressure Vs. Temperature Chart

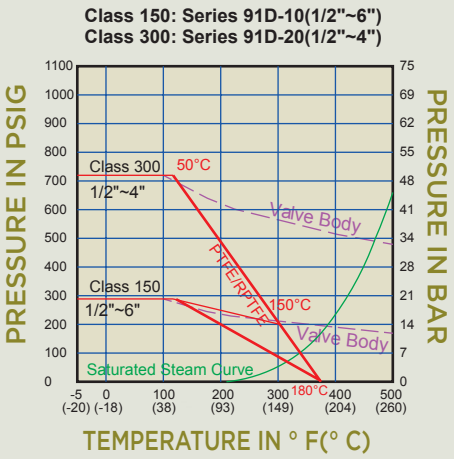

Material List

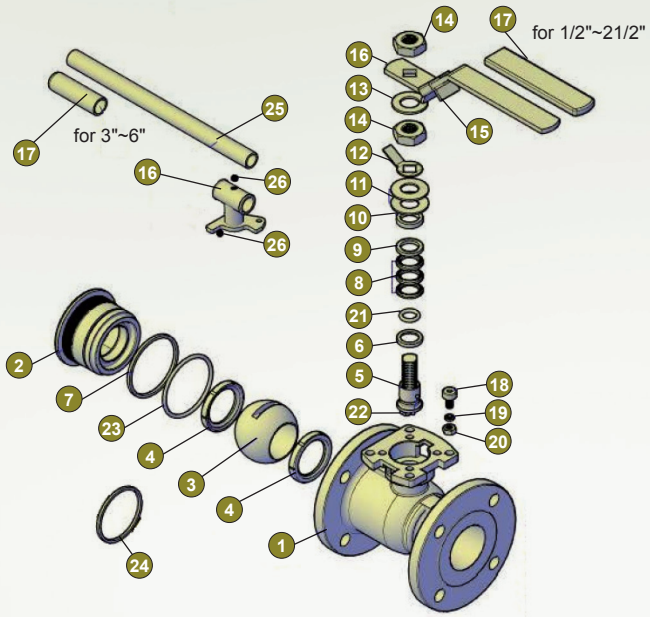

NO.	PART NAME	MATERIAL	Q'TY
1	Body	CF8M / WCB	1
2	End Cap	CF8M / WCB	1
3	Ball	CF8M	1
4	Seat	RPTFE	2
5	Stem	SUS 316	1
6	Stem Seal	RPTFE	1
7	Gasket-A	PTFE	1
8	Stem Packing	PTFE	*
9	Stem Packing	25% GLASS FIBER FILLED+ PTFE	1
10	Gland	SUS 304	1
11	Belleville Washer	SUS 301	2
12	Lock Saddle	SUS 304	1
13	Stem Washer	SUS 304	1
14	Stem Nut	SUS 304	#
15	Locking Device	SUS 304	1
16	Handle	SUS 304	1
17	Plastic Cover	PLASTIC	1
18	Stop Pin	SUS 304	1
19	Washer	SUS 304	1
20	Pin Nut	SUS 304	1
21	O-RING	VITON	1
22	Anti-static Device	SUS 316	2
23	O-RING	VITON	1
24	Gasket-B	PTFE	1
25	Handle-B	SS304 \ CARBON	1
26	Handle Screw	SUS 304	1

PS: * For 1/2"~11/2" QTY=2 * For 2"~6" QTY=3
For 1/2"~21/2" QTY=2 / 3"~6" QTY= 1pc
No.24 for 3" ~6"
for 3"~4" -HANDLE-B MATERIAL IS SS304
for 6" -HANDLE-B MATERIAL IS CARBON

Series 91D High Performance V-Port Control Ball Valves

Mars V-Port ball valves are used for control the flow. It delivers a precise flow control while retaining the durability and tight shutoff characteristics of a ball valve, excellent for regulating service. It is a compact and economical solution compared to traditional systems.

Available in 30°, 60°, and 90° V-notch configurations. Mars V-Port ball valves feature an integrated V-notch machined directly into the ball, not a seat insert, this design not only improves flow characteristics but also eliminates the need for frequent seat replacement.



Series 91D Available with Engineered Metal Seats

The Mars metal seat ball valve is built for tough applications involving high temperature, high pressure, and abrasive fluids. It's ideal for use in Oil & Gas, Petroleum, Petrochemical, Chemical, Pulp & Paper, and Mining industries.

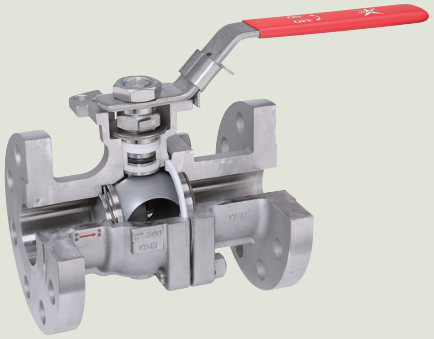

Series 91D With MARS TSM Unit



The TSM unit designed for possible Fugitive emission, provides a secondary stem seal to prolong service life.

The TSM unit can also function as stem extension for insulation.

Spring Return Sliding Lock Handle (SRSL)

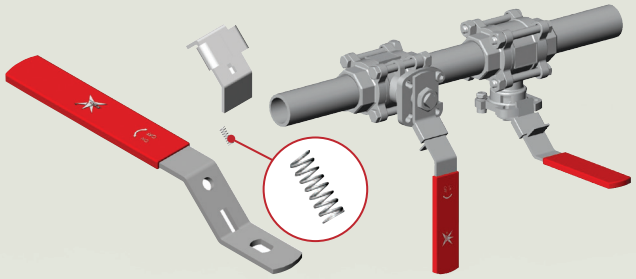

Regardless of the orientation of the ball valves, the SRSL handle always secures handle in position, making valve operation safe.

HOW TO ORDER ■ 91D-10 ST05B

91D-10	S	T	05	B
VALVE	BODY MATERIAL	SEAT MATERIAL	SIZE	HANDLE STYLE
■ 91D-10 ANSI 150	■ S - CF8M	□ P - PTFE	□ 03) 1/2"	□ Std. handle
□ 91D-20 ANSI 300	□ W - WCB	□ R - RTFE	□ 04) 3/4"	□ I - Investment Cast
	□ L - CF3M	■ T - TFM1600	■ 05) 1"	□ O - Oval handle
	□ D - Duplex	□ S - 50/50 S.S.+PTFE	□ 06) 1 1/4"	□ L - SRSL handle
	□ T - Titanium	□ M - MG1241	□ 07) 1 1/2"	□ S - SRS handle
	□ A - Alloy 20	□ C - Carbon filled PTFE	□ 08) 2"	■ B - Bare shaft
		□ U - UHMWPE	□ 09) 2 1/2"	□ G - Gear box
		□ A - Metal	□ 10) 3"	
			□ 11) 4"	
			□ 13) 6"	

MARS VALVE CO., LTD.
No.83, Sec.1, Chung De 8th Road,
Taichung, 406, Taiwan R.O.C
TEL: +886-4-2246-3808
FAX: +886-4-2247-0912
E-mail: mars@marsvalve.com.tw
sales@marsvalve.com.tw
www.marsvalve.com.tw

Distributed by: